Magnet pump (For chemical & sea water)

■Outline dimension

PMD-0531

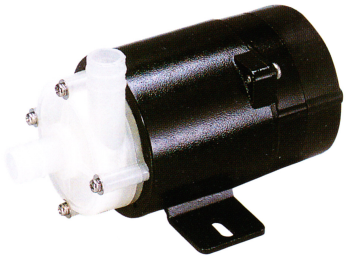

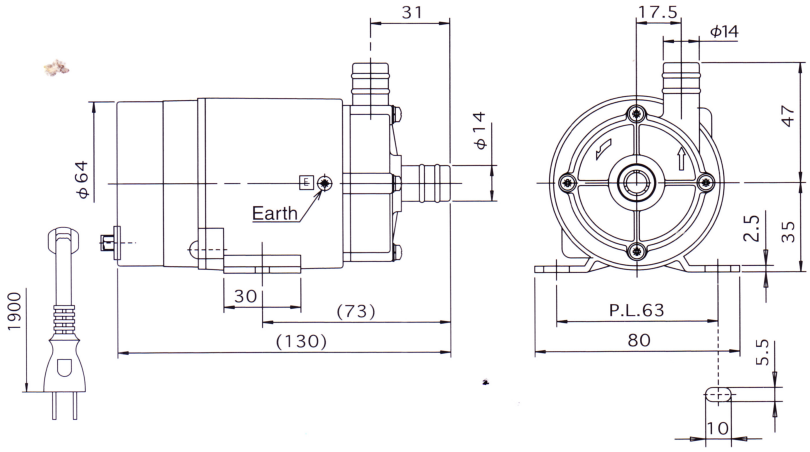

PMD-221

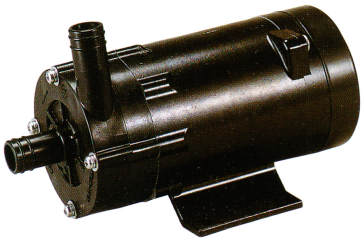

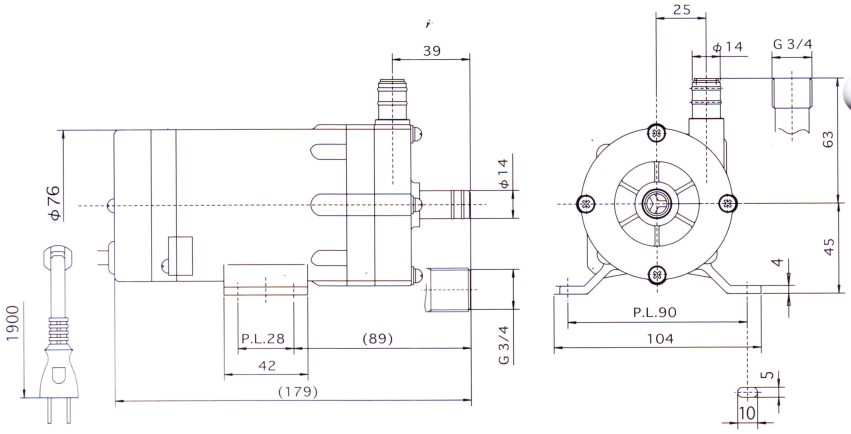

PMD-371

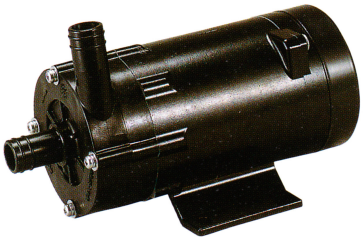

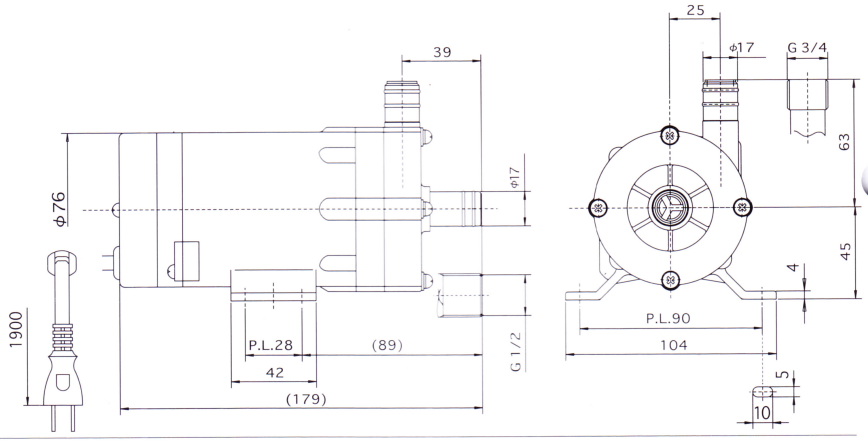

PMD-421

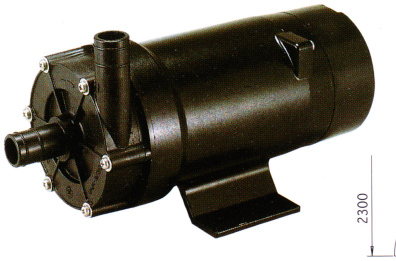

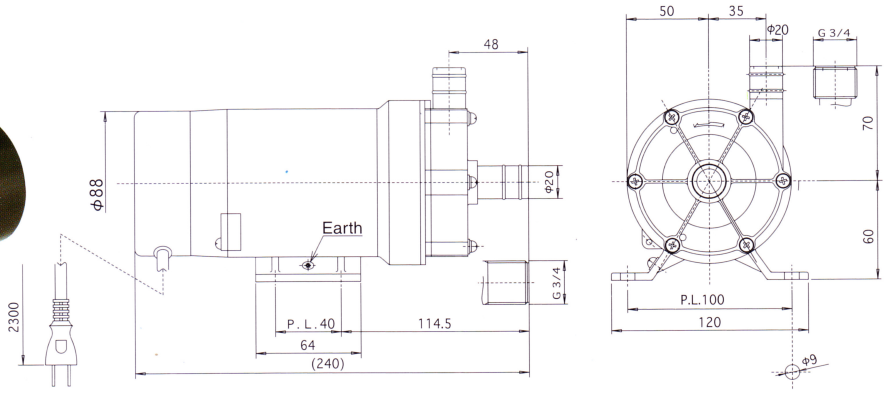

■Outline dimension

PMD- 581

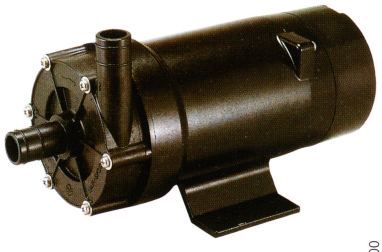

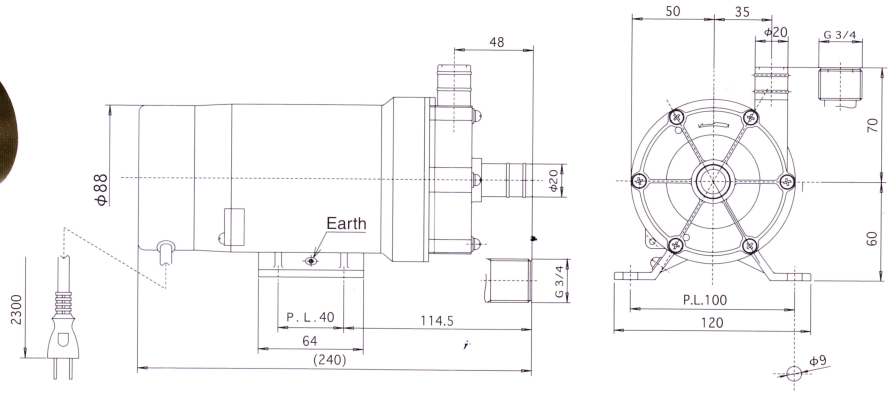

PMD-641/643

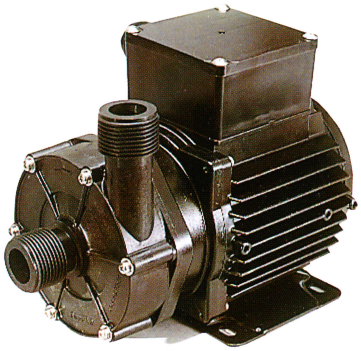

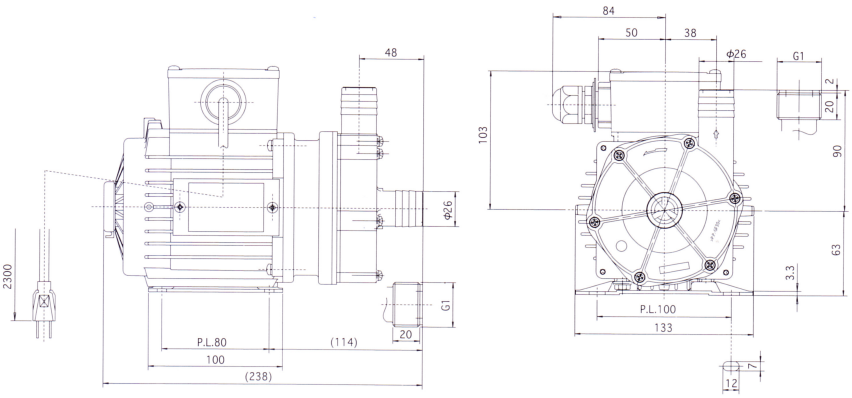

PMD-1561/1563

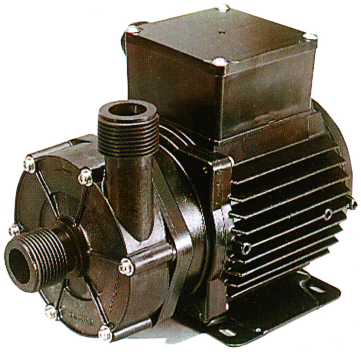

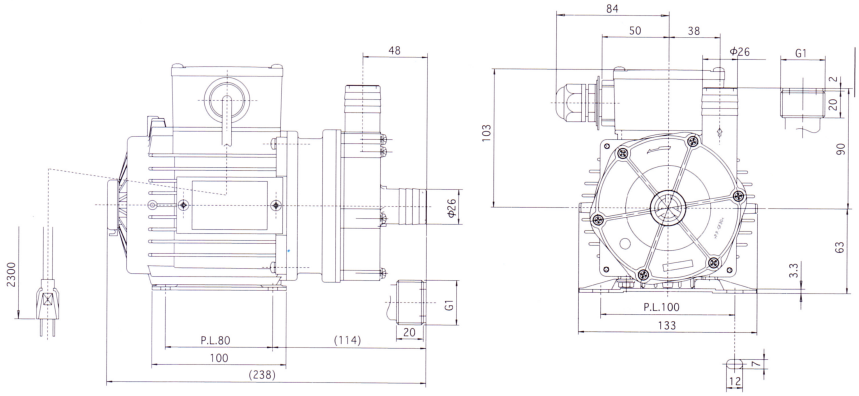

Magnet pump (For chemical & sea water)

■Outline dimension

PMD-2571A.B
PMD-2573A.B

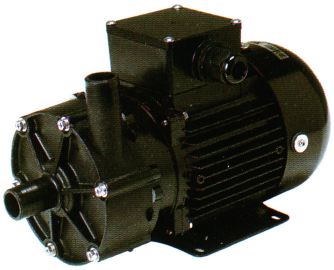

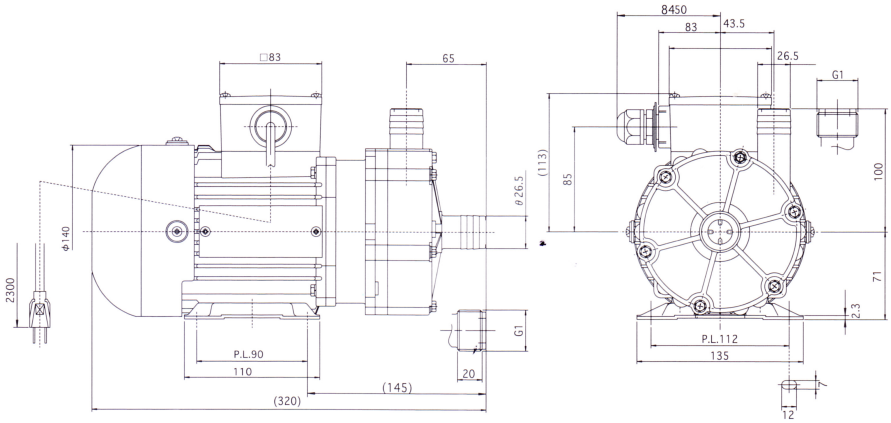

PMD-4033A.B

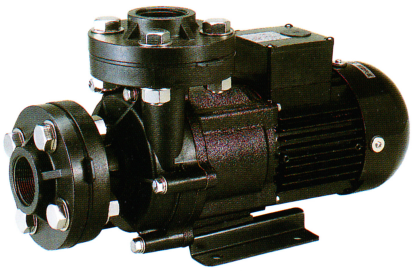

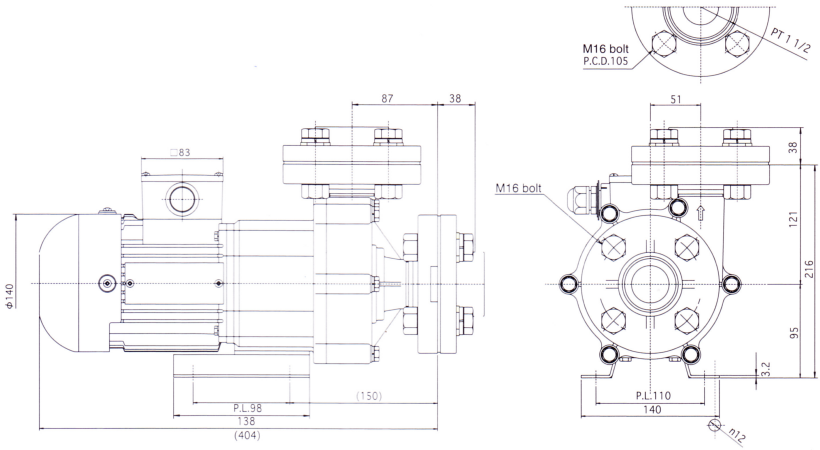

PMD-7533A.B

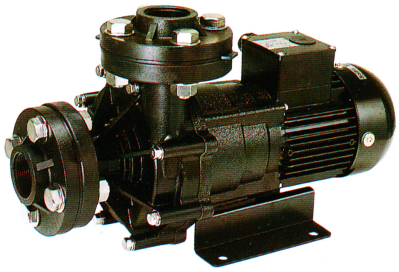

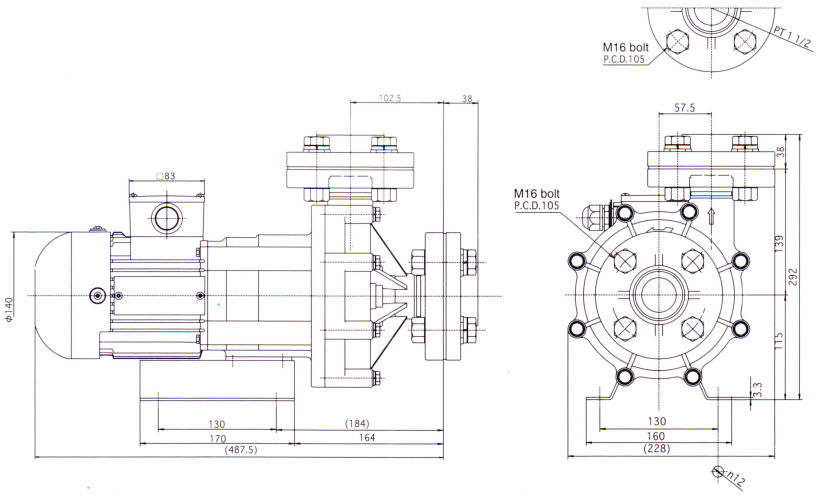

Magnet pump (For chemical & sea water)

■Performance curve(50Hz)

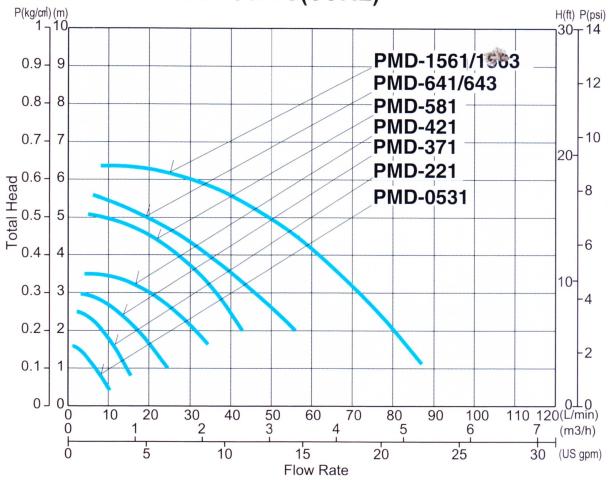

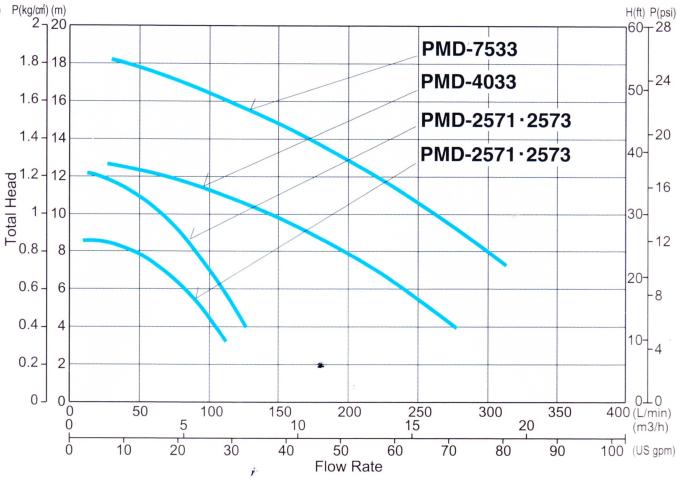

■Specification : Last figure of model name : 1 means single phase and 3 means three phase.

Item / Model	Diameter		Maximum		Rated Flow Rate	Motor			Weight
	Hose	Screw	Flow Rate	Head	5 0Hz / 6 0Hz	Rated Output	Power Consumption	Voltage	
	A(mm)	B(G—)	L / min	m	m-L / min	W	W	V	kg
PMD-371	17	3/4	25 / 28	3.0 / 4.2	2—18 / 3—19	15 / 20	32 / 43	100	1.7
PMD-581	20	3/4	43 / 48	5.1 / 6.8	3—35 / 5—35	40 / 60	70 / 110	100	3.4
PMD-641	26	1	62 / 72	5.7 / 8.0	3—50 / 5—50	65 / 100	105 / 155	100	4.8
PMD-1561	26	1	87 / 100	6.3 / 8.9	4—60 / 6—63	120 / 160	160 / 230	100	5.4
PMD-2571(50Hz)	26.5	1	125 / —	12.3 / —	8—75 / —	250 / —	430 / —	100	8.0
PMD-2573(50Hz)	26.5	1	125 / —	12.3 / —	8—75 / —	250 / —	410 / —	200	7.5
PMD-4033(50Hz)	40	1·1/2	300 / —	12.3 / —	10—140 / —	400 / —	540 / —	200	17.0
PMD-7533(50Hz)	40	1·1/2	380 / —	18.2 / —	12—210 / —	750 / —	901 / —	200	21.0

Conditions of liquids : Ambient Temp : 0 to 60℃ Viscosity : below 30㎟/s, Specific Gravity : below 1.1
Note (1) Slurry liquids reduce life of pump. (2) Pressure shall be less than 100kPa. (3) Indoor use.
(4) Shock pressure and abnormal pressure etc will damage the pump part. (5) Voltage can be adjusted to customer's requirement.